Ball valve Profi 101

one-piece, high k_V value, safefloat ball

Advantage
- optimised kv value - for all sizes, the internal ball diameter is constructively adapted to the internal pipe diameter
- one-piece body
- safefloat ball
- lockable hand lever (DN 65)

Application
- chemical plants
- industrial plants
- water treatment
- electroplating plants

Utilisation
- for shutting off pipeline systems

Flow Media
- Neutral and aggressive fluid or gaseous media free of solid particles, provided that the valve components coming into contact with the media are resistant at the operating temperature in accordance with the ASV resistance guide.

Testing
- Requirements and tests/inspections according to DIN 3441, 3442 and 8063. DIN EN 12266, leakage rate A tested.

Nominal Pressure (H_2O, 20°C)
- PN 10 - PN 16

Fluid Temperature
- see pressure/temperature diagram

Operating Pressure
- see pressure/temperature diagram

Size
- DN 10 - DN 65

Body
- PVC-U
- PP
- PVDF

Ball
- PVC-U
- PP
- PVDF

Ball Seat
- PTFE

Sealing
- FPM
- EPDM

Actuation
- with T-handle, simultaneously serving as a position indicator
- from DN 65 with hand lever, simultaneously serving as a position indicator
- DN 10 - DN 50 with electric actuator, DIN EN ISO 5211
- DN 10 - DN 50 with pneumatic actuator, DIN EN ISO 5211

Connection
- union DIN 8063
- union socket end for solvent welding DIN ISO (PVC-U)
- union socket end for fusion welding DIN ISO (PP)
- union socket end for fusion welding DIN ISO (PVDF)
- union spigot end for fusion welding DIN ISO (PP)
- union spigot end for fusion welding DIN ISO (PVDF)

Mounting
- as required

Fastening
- optionally available with bracket

Accessories
- limit switch unit
- bracket

Colour
- body: PVC-U, grey, RAL 7011
- body: PP, grey, RAL 7032
- body: PVDF, opaque, yellowish-white
- T-handle: PVC-U, orange, RAL 2004
- hand lever: PVC-U, orange, RAL 2004

All rights for technical modifications withheld

ASV Stübbe GmbH & Co. KG · Hollwieser Str. 5 · D-32602 Vlotho · Tel. +49(0)5733. 799-0 · Fax +49(0)5733. 799-200 · contact@asv-stuebbe.de · www.asv-stuebbe.de

Pressure/temperature diagram

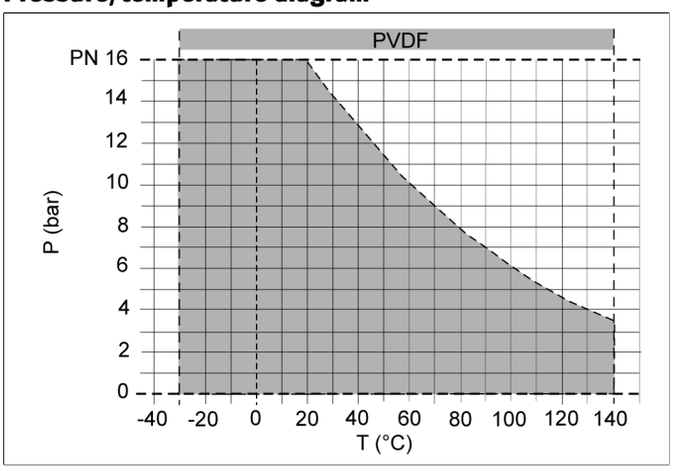

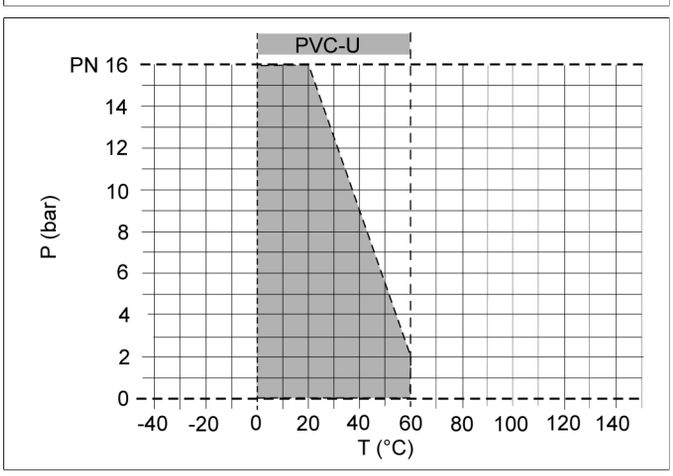

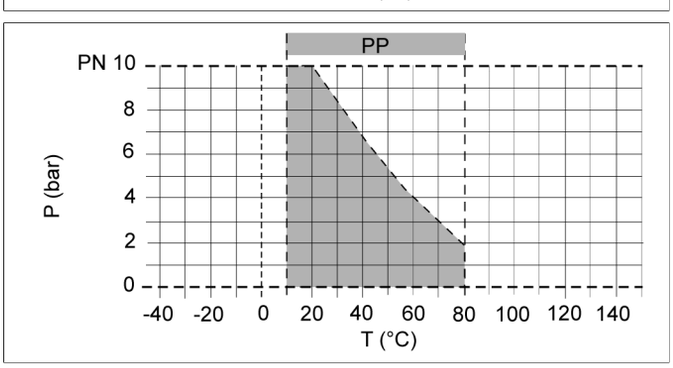

P = operating pressure
T = temperature

The pressure/temperature limits are applicable for the stated nominal pressures and a computed operating life factor of 25 years. These are standard values for harmless media (DIN 2403), to which the valve material is resistant.
For other media please refer to the ASV resistance guide.
The durability of wear parts depends on the operating conditions of the application.
For temperatures below 0°C (PP < +10°C) please specify the precise operating conditions of the application.
The rated pressure depends on the valve size and material. For the corresponding rated pressure value of the valve, please refer to the »Order table«

Pressure loss curve (standard values for H_2O, 20°C)

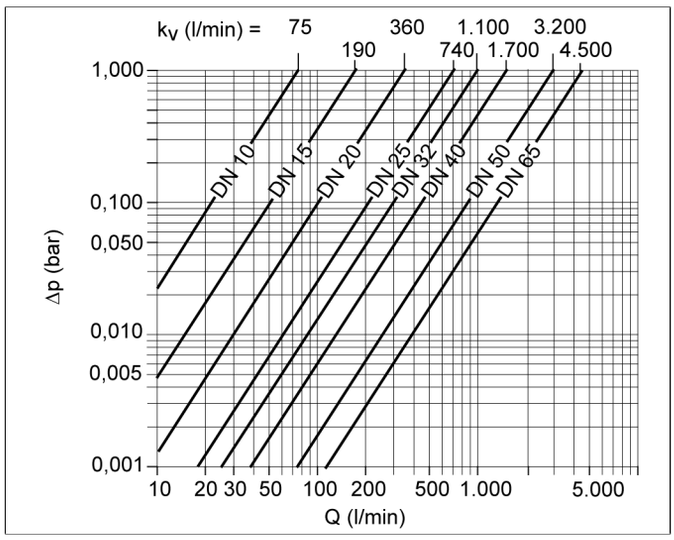

ΔP = pressure loss
Q = flow

pressure loss and k_v value

The diagram shows the pressure loss ΔP in relation to the flow Q.

Conversion aid:

$c_v = k_v \times 0.07$; $f_v = k_v \times 0.0585$

Units:

k_v [l/min]; c_v [gal/min] US; f_v [gal/min] GB

Flow characteristic

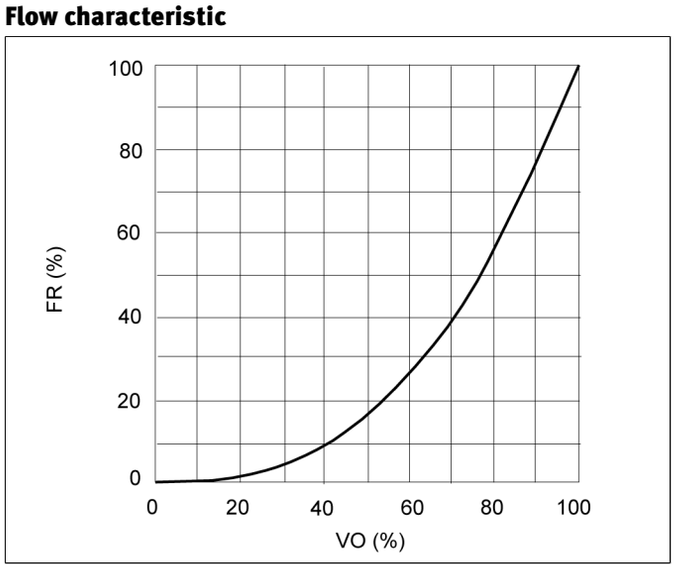

VO = valve opening
FR = $K_v$value

Torque (Nm)

d (mm)	16	20	25	32	40	50	63	75
PVC-U	2,5	2,5	3,6	4,5	6,2	8,5	11,0	22,0
PP/PVDF	-	2,0	3,0	4,0	5,8	8,0	10,3	22,0

The specified torques are standard values. They were determined at the specified nominal pressures with H2O, 20°C. These values can be higher or lower, depending on the operating pressure and the medium.

All rights for technical modifications withheld

ASV Stübbe GmbH & Co. KG · Hollwieser Str. 5 · D-32602 Vlotho · Tel. +49(0)5733. 799-0 · Fax +49(0)5733. 799-200 · contact@asv-stuebbe.de · www.asv-stuebbe.de

Operating note

Safe operation of the valve can only be ensured if it is properly installed, operated, serviced or repaired by qualified personnel according to its intended use while observing the accident prevention regulations, safety regulations, relevant standards, directives/technical regulations or codes of practice such as e.g. DIN, DIN EN, DIN ISO and DVS*. *DVS = German Welding Society The intended use includes adhering to specified limit values for pressure and temperature, as well as checking the resistance. This requires all components coming into contact with the medium to be "resistant" in accordance with the ASV resistance guide.

All rights for technical modifications withheld

ASV Stübbe GmbH & Co. KG · Hollwieser Str. 5 · D-32602 Vlotho · Tel. +49(0)5733. 799-0 · Fax +49(0)5733. 799-200 · contact@asv-stuebbe.de · www.asv-stuebbe.de

Ball valve Profi 101, manual [d16 - d63]

body PVC-U		ball PVC-U							
size	d(mm)		16	20	25	32	40	50	63
pressure range	DN(mm)		10	15	20	25	32	40	50
	DN(inch)		3/8	1/2	3/4	1	1 1/4	1 1/2	2
	PN(bar)		16	16	16	16	16	16	16
Connection	*ball seat*	*sealing*	*ident No.*						
PVC-U	PTFE	EPDM	132151	132152	132120	132153	132154	132155	132156
socket end DIN ISO	PTFE	FPM	132594	132158	132159	132160	132161	132162	132163
			0.15 kg	*0.15 kg*	*0.22 kg*	*0.32 kg*	*0.54 kg*	*0.68 kg*	*1.24 kg*

body PP		ball PP							
size	d(mm)			20	25	32	40	50	63
pressure range	DN(mm)			15	20	25	32	40	50
	DN(inch)			1/2	3/4	1	1 1/4	1 1/2	2
	PN(bar)			10	10	10	10	10	10
Connection	*ball seat*	*sealing*	*ident No.*						
PP	PTFE	EPDM		132391	132392	132393	132394	132395	132396
socket end DIN ISO	PTFE	FPM		132397	132398	132399	132400	132401	132402
				0.11 kg	*0.18 kg*	*0.28 kg*	*0.44 kg*	*0.54 kg*	*0.92 kg*
PP	PTFE	EPDM		132165	132166	132167	132168	132169	132170
spigot end DIN ISO	PTFE	FPM		132172	132173	132174	132175	132176	132177
				0.14 kg	*0.20 kg*	*0.30 kg*	*0.47 kg*	*0.64 kg*	*1.02 kg*

body PVDF		ball PVDF							
size	d(mm)			20	25	32	40	50	63
pressure range	DN(mm)			15	20	25	32	40	50
	DN(inch)			1/2	3/4	1	1 1/4	1 1/2	2
	PN(bar)			16	16	16	16	16	16
Connection	*ball seat*	*sealing*	*ident No.*						
PVDF	PTFE	FPM		140526	140527	140528	140529	140530	140531
socket end DIN ISO				*0.16 kg*	*0.26 kg*	*0.36 kg*	*0.61 kg*	*0.78 kg*	*1.42 kg*
PVDF	PTFE	FPM		140532	140533	140534	140535	140536	140537
spigot end DIN ISO				*0.20 kg*	*0.29 kg*	*0.41 kg*	*0.68 kg*	*0.87 kg*	*1.54 kg*

All rights for technical modifications withheld

ASV Stübbe GmbH & Co. KG · Hollwieser Str. 5 · D-32602 Vlotho · Tel. +49(0)5733. 799-0 · Fax +49(0)5733. 799-200 · contact@asv-stuebbe.de · www.asv-stuebbe.de

Ball valve Profi 101, manual [d16 - d63]

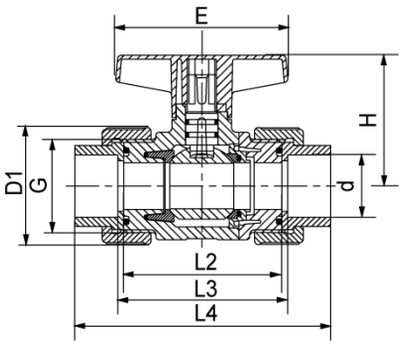

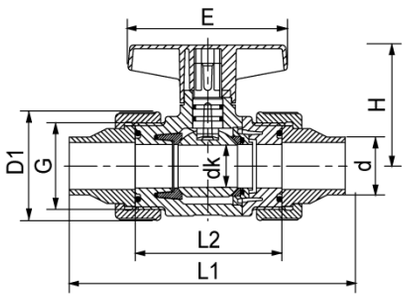

dimensions

d(mm)		16	20	25	32	40	50	63
DN(mm)		10	15	20	25	32	40	50
DN(inch)		3/8	1/2	3/4	1	1 1/4	1 1/2	2
dimensions(mm)								
	dk	13.5	13.5	18	23.5	30.5	38.5	49
PP	D1	-	46	56	66	79	87	107
PVC-U	D1	44	44	53	60.1	74	83	103
PVDF	D1	-	43	51.5	58.4	72	80.8	100.5
	E	68	68	78	88	98	108	118
	G	1	1	1 1/4	1 1/2	2	2 1/4	2 3/4
	H	51	51	61	70	81	90	110
PP	L1	-	173	185	189	201	205	225
PVDF	L1	-	169	186	196	214	224	251
PP	L2	-	63	75	79	91	95	115
PVC-U	L2	64	64	76	81	92	95	115
PVDF	L2	-	63	74	78	90	94	115
PP	L3	-	69	81	85	97	101	121
PVC-U	L3	70	70	82	87	98	101	121
PVDF	L3	-	69	80	84	96	100	121
PP	L4	-	98	113	121	138	148	176
PVC-U	L4	102	102	120	131	150	163	197
PVDF	L4	-	98	112	120	137	147	176

All rights for technical modifications withheld

ASV Stübbe GmbH & Co. KG · Hollwieser Str. 5 · D-32602 Vlotho · Tel. +49(0)5733. 799-0 · Fax +49(0)5733. 799-200 · contact@asv-stuebbe.de · www.asv-stuebbe.de

Ball valve Profi 101, manual [d75]

body PVC-U		**ball PVC-U**		
size	d(mm)			75
pressure range	DN(mm)			65
	DN(inch)			2 1/2
	PN(bar)			16
Connection	*ball seat*	*sealing*	*ident No.*	
PVC-U	PTFE	EPDM		134165
socket end DIN ISO	PTFE	FPM		134166
				3.48 kg

body PP		**ball PP**		
size	d(mm)			75
pressure range	DN(mm)			65
	DN(inch)			2 1/2
	PN(bar)			10
Connection	*ball seat*	*sealing*	*ident No.*	
PP	PTFE	EPDM		134168
socket end DIN ISO	PTFE	FPM		134169
				2.50 kg
PP	PTFE	EPDM		134177
spigot end DIN ISO	PTFE	FPM		134178
				2.65 kg

All rights for technical modifications withheld

ASV Stübbe GmbH & Co. KG · Hollwieser Str. 5 · D-32602 Vlotho · Tel. +49(0)5733. 799-0 · Fax +49(0)5733. 799-200 · contact@asv-stuebbe.de · www.asv-stuebbe.de

Ball valve Profi 101, manual [d75]

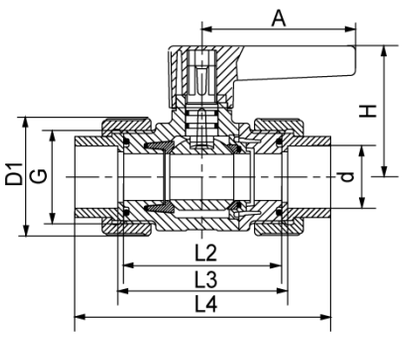

dimensions

d(mm)		75
DN(mm)		65
DN(inch)		2 1/2
dimensions(mm)		
	A	150
	dk	54
PP	D1	129
PVC-U	D1	118
	G	3 1/2
	H	140
	L1	312
PP	L2	202
PVC-U	L2	206
	L3	214
	L4	302

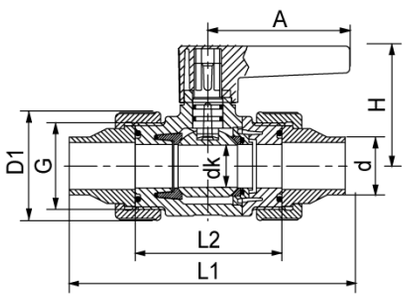

All rights for technical modifications withheld

ASV Stübbe GmbH & Co. KG · Hollwieser Str. 5 · D-32602 Vlotho · Tel. +49(0)5733. 799-0 · Fax +49(0)5733. 799-200 · contact@asv-stuebbe.de · www.asv-stuebbe.de

Ball valve Profi 101, electric [d16 - d63]

Voltage
- please refer to the technical data
- further drive variants and options on request

Mounting Set
- PA, glass fibre reinforced

Coupling
- PA, glass fibre reinforced

Bracket
- PA, glass fibre reinforced

Screws
- stainless steel (1.4301)

Actuator variant 230 V			body PVC-U		ball PVC-U				
size	d(mm)		16	20	25	32	40	50	63
pressure range	DN(mm)		10	15	20	25	32	40	50
	DN(inch)		3/8	1/2	3/4	1	1 1/4	1 1/2	2
	PN(bar)		16	16	16	16	16	16	16
Connection	*ball seat*	*sealing*	*ident No.*						
PVC-U	PTFE	EPDM	1321519030	1321529030	1321209030	1321539030	1321549030	1321559030	1321569030
socket end DIN ISO	PTFE	FPM	1325949030	1321589030	1321599030	1321609030	1321619030	1321629030	1321639030
			1.56 kg	*1.86 kg*	*1.97 kg*	*2.08 kg*	*2.38 kg*	*2.43 kg*	*2.96 kg*

Actuator variant 230 V			body PP		ball PP				
size	d(mm)			20	25	32	40	50	63
pressure range	DN(mm)			15	20	25	32	40	50
	DN(inch)			1/2	3/4	1	1 1/4	1 1/2	2
	PN(bar)			10	10	10	10	10	10
Connection	*ball seat*	*sealing*	*ident No.*						
PP	PTFE	EPDM		1323919030	1323929030	1323939030	1323949030	1323959030	1323969030
socket end DIN ISO	PTFE	FPM		1323979030	1323989030	1323999030	1324009030	1324019030	1324029030
				1.83 kg	*1.90 kg*	*1.99 kg*	*2.17 kg*	*2.44 kg*	*2.66 kg*
PP	PTFE	EPDM		1321659030	1321669030	1321679030	1321689030	1321699030	1321709030
spigot end DIN ISO	PTFE	FPM		1321729030	1321739030	1321749030	1321759030	1321769030	1321779030
				1.84 kg	*1.92 kg*	*2.01 kg*	*2.19 kg*	*2.46 kg*	*2.90 kg*

All rights for technical modifications withheld

ASV Stübbe GmbH & Co. KG · Hollwieser Str. 5 · D-32602 Vlotho · Tel. +49(0)5733. 799-0 · Fax +49(0)5733. 799-200 · contact@asv-stuebbe.de · www.asv-stuebbe.de

Ball valve Profi 101, electric [d16 - d63]

Actuator variant 230 V			**body PVDF**			**ball PVDF**			
size	d(mm)			20	25	32	40	50	63
pressure range	DN(mm)			15	20	25	32	40	50
	DN(inch)			1/2	3/4	1	1 1/4	1 1/2	2
	PN(bar)			16	16	16	16	16	16
Connection	*ball seat*	*sealing*	*ident No.*						
PVDF socket end DIN ISO	PTFE	FPM		1405269030 *1.83 kg*	1405279030 *1.90 kg*	1405289030 *1.99 kg*	1405299030 *2.17 kg*	1405309030 *2.44 kg*	1405319030 *2.66 kg*
PVDF spigot end DIN ISO	PTFE	FPM		1405329030 *1.84 kg*	1405339030 *1.92 kg*	1405349030 *2.01 kg*	1405359030 *2.19 kg*	1405369030 *2.46 kg*	1405379030 *2.90 kg*

All rights for technical modifications withheld

ASV Stübbe GmbH & Co. KG · Hollwieser Str. 5 · D-32602 Vlotho · Tel. +49(0)5733. 799-0 · Fax +49(0)5733. 799-200 · contact@asv-stuebbe.de · www.asv-stuebbe.de

Ball valve Profi 101, electric [d16 - d63]

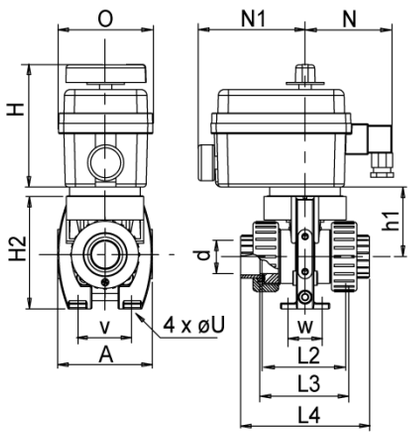

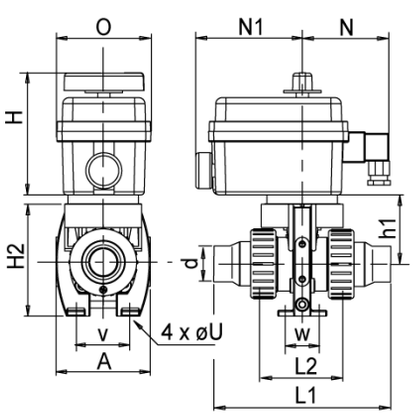

dimensions

d(mm)		16	20	25	32	40	50	63
DN(mm)		10	15	20	25	32	40	50
DN(inch)		3/8	1/2	3/4	1	1 1/4	1 1/2	2
actuator type		EK20	EK20	EK20	EK20	EK20	EK20	EK20
dimensions(mm)								
	A	78	78	82	104	102	130	134
	dk	13.5	13.5	18	23.5	30.5	38.5	49
PP	D1	-	46	56	66	79	87	107
PVC-U	D1	44	44	53	60	74	83	103
PVDF	D1	-	43	51.5	58.4	72	80.8	100.5
	h1	50	50	60	66	74	105.5	118
	H	118	118	118	118	118	118	118
	H2	97	97	105	128	128	188.5	192.5
PP	L1	-	173	185	189	201	205	225
PVDF	L1	-	169	186	196	214	224	251
PP	L2	-	63	75	79	91	95	115
PVC-U	L2	64	64	76	81	92	95	115
PVDF	L2	-	63	74	78	90	94	115
PP	L3	-	69	81	85	97	101	121
PVC-U	L3	70	70	82	87	98	101	121
PVDF	L3	-	69	80	84	96	100	121
PP	L4	-	98	113	121	138	148	176
PVC-U	L4	102	102	120	131	150	163	197
PVDF	L4	-	98	112	120	137	147	176
	N	84	84	84	84	84	84	84
	N1	105	105	105	105	105	105	105
	O	92	92	92	92	92	92	92
	u	5.5	5.5	5.5	5.5	5.5	5.5	5.5
	V	44	44	47	58	51	90	88
	w	30	30	30	30	30	30	30

All rights for technical modifications withheld

ASV Stübbe GmbH & Co. KG · Hollwieser Str. 5 · D-32602 Vlotho · Tel. +49(0)5733. 799-0 · Fax +49(0)5733. 799-200 · contact@asv-stuebbe.de · www.asv-stuebbe.de

Ball valve Profi 101, electric [d16 - d63]

Technical data

EK-Line

actuator type	EK20	EK20 (*)
Torque	20	20
Voltage	230 VAC	24 VAC/DC
Manipulating time(s)	7	7
Power consumption(W)	11	11
Setting angle(°)	90	90
Weight(kg)	1.2	1.2
Duty cycle(%)	30	30
Type of protection	IP 65	IP 65
Temperature(°C)	-10 ... 55	-10 ... 55

(*) Drive variants: please order separately.

Recommended wiring

EK-Line

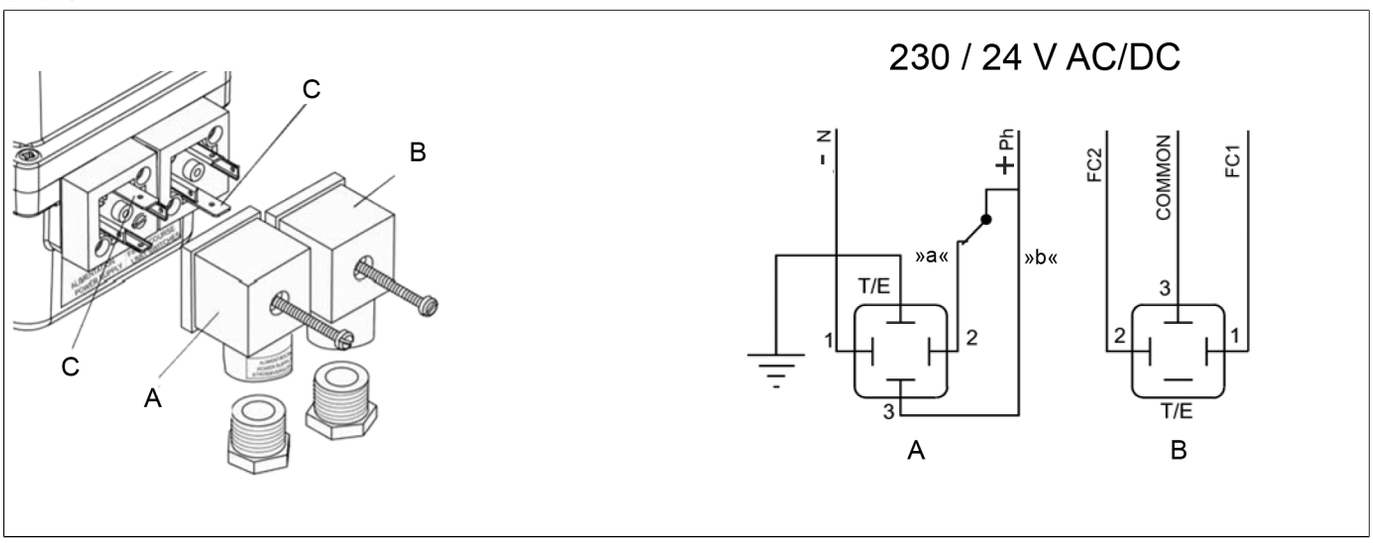

A = power supply
B = additional limit switches
C = earth
FC1 = additional limit switches 1
FC2 = additional limit switches 2
»a« = OPEN
»b« = CLOSED

manual emergency control

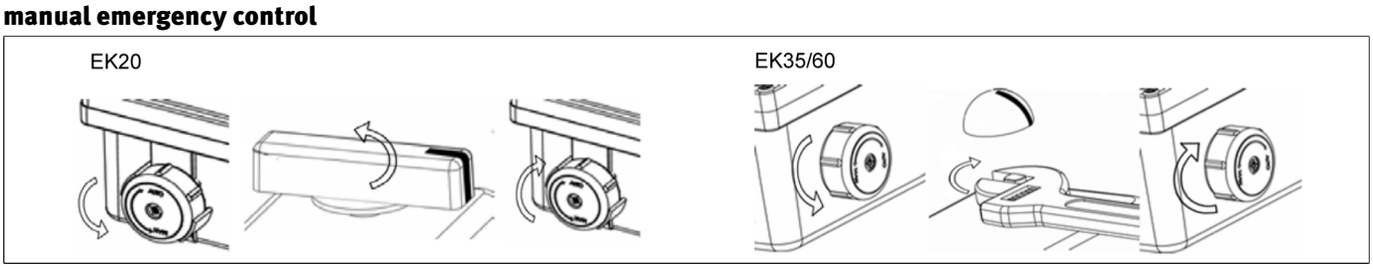

The valve can be manually operated in the event of an interruption of the power supply. To allow manual emergency control, turn the coupling switch from "AUTO" to "MAN" and hold in the "MAN" position.. EK20 (Use the T-handle to turn the actuator shaft.); EK35-EK60 (Turn the actuator shaft with the aid of an adjustable spanner.) Release the coupling switch to re-engage the gearing.

All rights for technical modifications withheld

ASV Stübbe GmbH & Co. KG · Hollwieser Str. 5 · D-32602 Vlotho · Tel. +49(0)5733. 799-0 · Fax +49(0)5733. 799-200 · contact@asv-stuebbe.de · www.asv-stuebbe.de

Ball valve Profi 101, pneumatic [d16 - d63]

Control Pressure
- 6 bar

Control Function
- NC (normally closed)
- NO (normally open)
- DA (double acting)

Mounting Set
- PA, glass fibre reinforced

Coupling
- PA, glass fibre reinforced

Screws
- stainless steel (1.4301)

Standard
- visual position indicator
- further options such as limit switch unit, positioner or pilot valves on request

Actuator variant NC			body PVC-U		ball PVC-U				
size	d(mm)		16	20	25	32	40	50	63
pressure range	DN(mm)		10	15	20	25	32	40	50
	DN(inch)		3/8	1/2	3/4	1	1 1/4	1 1/2	2
	PN(bar)		16	16	16	16	16	16	16
Connection	*ball seat*	*sealing*	*ident No.*						
PVC-U	PTFE	EPDM	1321519560	1321529560	1321209560	1321539560	1321549560	1321559560	1321569560
socket end DIN ISO	PTFE	FPM	1325949560	1321589560	1321599560	1321609560	1321619560	1321629560	1321639560
			1.11 kg	*1.13 kg*	*1.80 kg*	*1.91 kg*	*2.21 kg*	*3.63 kg*	*4.33 kg*

Actuator variant NO			body PVC-U		ball PVC-U				
size	d(mm)		16	20	25	32	40	50	63
pressure range	DN(mm)		10	15	20	25	32	40	50
	DN(inch)		3/8	1/2	3/4	1	1 1/4	1 1/2	2
	PN(bar)		16	16	16	16	16	16	16
Connection	*ball seat*	*sealing*	*ident No.*						
PVC-U	PTFE	EPDM	1321519570	1321529570	1321209570	1321539570	1321549570	1321559570	1321569570
socket end DIN ISO	PTFE	FPM	1325949570	1321589570	1321599570	1321609570	1321619570	1321629570	1321639570
			1.11 kg	*1.13 kg*	*1.80 kg*	*1.91 kg*	*2.21 kg*	*3.63 kg*	*4.33 kg*

All rights for technical modifications withheld

ASV Stübbe GmbH & Co. KG · Hollwieser Str. 5 · D-32602 Vlotho · Tel. +49(0)5733. 799-0 · Fax +49(0)5733. 799-200 · contact@asv-stuebbe.de · www.asv-stuebbe.de

Ball valve Profi 101, pneumatic [d16 - d63]

Actuator variant DA			body PVC-U		ball PVC-U				
size	d(mm)		16	20	25	32	40	50	63
pressure range	DN(mm)		10	15	20	25	32	40	50
	DN(inch)		3/8	1/2	3/4	1	1 1/4	1 1/2	2
	PN(bar)		16	16	16	16	16	16	16
Connection	*ball seat*	*sealing*	*ident No.*						
PVC-U	PTFE	EPDM	1321519580	1321529580	1321209580	1321539580	1321549580	1321559580	1321569580
socket end DIN ISO	PTFE	FPM	1325949580	1321589580	1321599580	1321609580	1321619580	1321629580	1321639580
			0.97 kg	*0.99 kg*	*1.10 kg*	*1.21 kg*	*1.94 kg*	*2.89 kg*	*3.59 kg*

Actuator variant NC			body PP	ball PP					
size	d(mm)			20	25	32	40	50	63
pressure range	DN(mm)			15	20	25	32	40	50
	DN(inch)			1/2	3/4	1	1 1/4	1 1/2	2
	PN(bar)			10	10	10	10	10	10
Connection	*ball seat*	*sealing*	*ident No.*						
PP	PTFE	EPDM		1323919560	1323929560	1323939560	1323949560	1323959560	1323969560
socket end DIN ISO	PTFE	FPM		1323979560	1323989560	1323999560	1324009560	1324019560	1324029560
				1.02 kg	*1.62 kg*	*1.72 kg*	*1.99 kg*	*3.27 kg*	*3.90 kg*
PP	PTFE	EPDM		1321659560	1321669560	1321679560	1321689560	1321699560	1321709560
spigot end DIN ISO	PTFE	FPM		1321729560	1321739560	1321749560	1321759560	1321769560	1321779560
				1.06 kg	*1.65 kg*	*1.77 kg*	*2.06 kg*	*3.36 kg*	*4.02 kg*

Actuator variant NO			body PP	ball PP					
size	d(mm)			20	25	32	40	50	63
pressure range	DN(mm)			15	20	25	32	40	50
	DN(inch)			1/2	3/4	1	1 1/4	1 1/2	2
	PN(bar)			10	10	10	10	10	10
Connection	*ball seat*	*sealing*	*ident No.*						
PP	PTFE	EPDM		1323919570	1323929570	1323939570	1323949570	1323959570	1323969570
socket end DIN ISO	PTFE	FPM		1323979570	1323989570	1323999570	1324009570	1324019570	1324029570
				1.02 kg	*1.62 kg*	*1.72 kg*	*2.00 kg*	*3.27 kg*	*3.90 kg*
PP	PTFE	EPDM		1321659570	1321669570	1321679570	1321689570	1321699570	1321709570
spigot end DIN ISO	PTFE	FPM		1321729570	1321739570	1321749570	1321759570	1321769570	1321779570
				1.06 kg	*1.65 kg*	*1.77 kg*	*2.06 kg*	*3.36 kg*	*4.02 kg*

All rights for technical modifications withheld

ASV Stübbe GmbH & Co. KG · Hollwieser Str. 5 · D-32602 Vlotho · Tel. +49(0)5733. 799-0 · Fax +49(0)5733. 799-200 · contact@asv-stuebbe.de · www.asv-stuebbe.de

Ball valve Profi 101, pneumatic [d16 - d63]

Actuator variant DA		body PP			ball PP				
size	d(mm)			20	25	32	40	50	63
pressure range	DN(mm)			15	20	25	32	40	50
	DN(inch)			1/2	3/4	1	1 1/4	1 1/2	2
	PN(bar)			10	10	10	10	10	10
Connection	*ball seat*	*sealing*	*ident No.*						
PP socket end DIN ISO	PTFE	EPDM		1323919580	1323929580	1323939580	1323949580	1323959580	1323969580
	PTFE	FPM		1323979580	1323989580	1323999580	1324009580	1324019580	1324029580
				0.94 kg	*0.99 kg*	*1.09 kg*	*1.75 kg*	*2.60 kg*	*3.23 kg*
PP spigot end DIN ISO	PTFE	EPDM		1321659580	1321669580	1321679580	1321689580	1321699580	1321709580
	PTFE	FPM		1321729580	1321739580	1321749580	1321759580	1321769580	1321779580
				0.98 kg	*1.02 kg*	*1.14 kg*	*1.82 kg*	*2.69 kg*	*3.35 kg*

Actuator variant NC		body PVDF			ball PVDF				
size	d(mm)			20	25	32	40	50	63
pressure range	DN(mm)			15	20	25	32	40	50
	DN(inch)			1/2	3/4	1	1 1/4	1 1/2	2
	PN(bar)			16	16	16	16	16	16
Connection	*ball seat*	*sealing*	*ident No.*						
PVDF socket end DIN ISO	PTFE	FPM		1405269560	1405279560	1405289560	1405299560	1405309560	1405319560
				1.24 kg	*1.98 kg*	*2.10 kg*	*2.43 kg*	*3.99 kg*	*4.76 kg*
PVDF spigot end DIN ISO	PTFE	FPM		1405329560	1405339560	1405349560	1405359560	1405369560	1405379560
				1.28 kg	*2.01 kg*	*2.15 kg*	*2.50 kg*	*4.08 kg*	*4.88 kg*

Actuator variant NO		body PVDF			ball PVDF				
size	d(mm)			20	25	32	40	50	63
pressure range	DN(mm)			15	20	25	32	40	50
	DN(inch)			1/2	3/4	1	1 1/4	1 1/2	2
	PN(bar)			16	16	16	16	16	16
Connection	*ball seat*	*sealing*	*ident No.*						
PVDF socket end DIN ISO	PTFE	FPM		1405269570	1405279570	1405289570	1405299570	1405309570	1405319570
				1.24 kg	*1.98 kg*	*2.10 kg*	*2.43 kg*	*3.99 kg*	*4.76 kg*
PVDF spigot end DIN ISO	PTFE	FPM		1405329570	1405339570	1405349570	1405359570	1405369570	1405379570
				1.28 kg	*2.01 kg*	*2.15 kg*	*2.50 kg*	*4.08 kg*	*4.88 kg*

All rights for technical modifications withheld

ASV Stübbe GmbH & Co. KG · Hollwieser Str. 5 · D-32602 Vlotho · Tel. +49(0)5733. 799-0 · Fax +49(0)5733. 799-200 · contact@asv-stuebbe.de · www.asv-stuebbe.de

Ball valve Profi 101, pneumatic [d16 - d63]

Actuator variant DA			body PVDF			ball PVDF					
size	d(mm)			20	25	32	40	50	63
pressure range	DN(mm)			15	20	25	32	40	50
	DN(inch)			1/2	3/4	1	1 1/4	1 1/2	2
	PN(bar)			16	16	16	16	16	16
Connection	*ball seat*	*sealing*	*ident No.*						
PVDF socket end DIN ISO	PTFE	FPM		1405269580 *1.09 kg*	1405279580 *1.21 kg*	1405289580 *1.33 kg*	1405299580 *2.13 kg*	1405309580 *3.18 kg*	1405319580 *3.95 kg*
PVDF spigot end DIN ISO	PTFE	FPM		1405329580 *1.17 kg*	1405339580 *1.24 kg*	1405349580 *1.38 kg*	1405359580 *2.20 kg*	1405369580 *3.27 kg*	1405379580 *4.07 kg*

All rights for technical modifications withheld

ASV Stübbe GmbH & Co. KG · Hollwieser Str. 5 · D-32602 Vlotho · Tel. +49(0)5733. 799-0 · Fax +49(0)5733. 799-200 · contact@asv-stuebbe.de · www.asv-stuebbe.de

Ball valve Profi 101, pneumatic [d16 - d63]

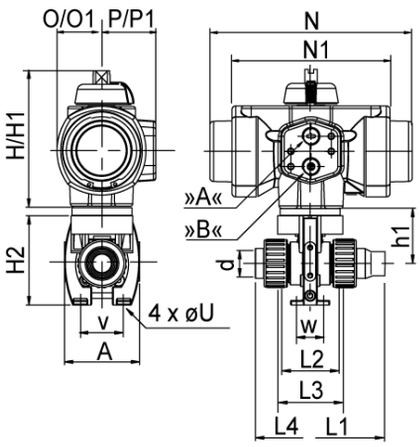

N/O/P/H = NC-NO
N1/O1/P1/H1 = DA

dimensions

d(mm)		16	20	25	32	40	50	63
DN(mm)		10	15	20	25	32	40	50
DN(inch)		3/8	1/2	3/4	1	1 1/4	1 1/2	2
actuator type		PPW DA PPWS NC/NO	PPW DA PPWS NC/NO	PPW DA PP00S NC/NO	PPW DA PP00S NC/NO	PP00 DA PP00S NC/NO	PP10 DA PP10S NC/NO	PP10 DA PP10S NC/NO
dimensions(mm)								
PP/PVC-U/PVDF DA/NC/NO PP/PVC-U/PVDF	A	78	78	82	104	102	130	134
PP NC PP	A	-	104	82	104	102	130	134
PVC-U/PVDF	A	78	78	104	104	102	130	134
	dk	13.5	13.5	18	23.5	30.5	38.5	49
PP	D1	-	46	56	66	79	87	107
PVC-U	D1	44	44	53	60	74	83	103
PVDF	D1	-	43	51.5	58.4	72	80.8	100.5
	h1	50	50	60	66	74	105.5	118
	H	85	85	110	110	110	128	128
	H1	85	85	85	85	110	128	128
	H2	97	97	105	128	128	188.5	192.5
PP	L1	-	173	185	189	201	205	225
PVC-U	L1	-	174	186	191	202	205	225
PVDF	L1	-	169	186	196	214	224	251
PP	L2	-	63	75	79	91	95	115
PVC-U	L2	64	64	76	81	92	95	115
PVDF	L2	-	63	74	78	90	94	115
PP	L3	-	69	81	85	97	101	121
PVC-U	L3	70	70	82	87	98	101	121
PVDF	L3	-	69	80	84	96	100	121
PP	L4	-	98	113	121	138	148	176
PVC-U	L4	102	102	120	131	150	163	197
PVDF	L4	-	98	112	120	137	147	176
	N	142	142	155	155	155	230	230
	N1	107	107	107	107	125	182	182
	O	31	31	36	36	36	49	49
	O1	31	31	31	31	36	49	49
	P	37.5	37.5	44	44	44	53	53
	P1	37.5	37.5	37.5	37.5	44	53	53
	u	5.5	5.5	5.5	5.5	5.5	5.5	5.5
	V	44	44	47	58	51	90	88
	w	30	30	30	30	30	30	27.5

All rights for technical modifications withheld

ASV Stübbe GmbH & Co. KG · Hollwieser Str. 5 · D-32602 Vlotho · Tel. +49(0)5733. 799-0 · Fax +49(0)5733. 799-200 · contact@asv-stuebbe.de · www.asv-stuebbe.de

Ball valve Profi 101, pneumatic [d16 - d63]

Technical data

PP-Line

Option (to be ordered additionally if required)

limit switch unit; positioner; handwheel; pilot solenoid valve; AS Interface connection

actuator type	PPWS	PP00S	PP10S
Function	NC/NO	NC/NO	NC/NO
Torque (start) at 6 bar(Nm)	10.4	15.9	46.6
Torque (end) at 6 bar(Nm)	6.5	11.3	32.3
Control volume (Opening)(Liter)	0.08	0.15	0.35
Manipulating time (Opening)(s)	0.15	0.2	0.3
Manipulating time (Closing)(s)	0.15	0.2	0.3
Control pressure connection(inch)	1/4	1/4	1/4
Weight(kg)	0.47	1.03	2.15

actuator type	PPW	PP00	PP10
Function	DA	DA	DA
Torque (start) at 6 bar(Nm)	17	25	71
Control volume (Opening)(Liter)	0.08	0.15	0.35
Control volume (Closing)(Liter)	0.05	0.1	0.32
Manipulating time (Opening)(s)	0.1	0.15	0.25
Manipulating time (Closing)(s)	0.1	0.15	0.25
Control pressure connection(inch)	1/4	1/4	1/4
Weight(kg)	0.33	0.76	1.41

Control pressure connection

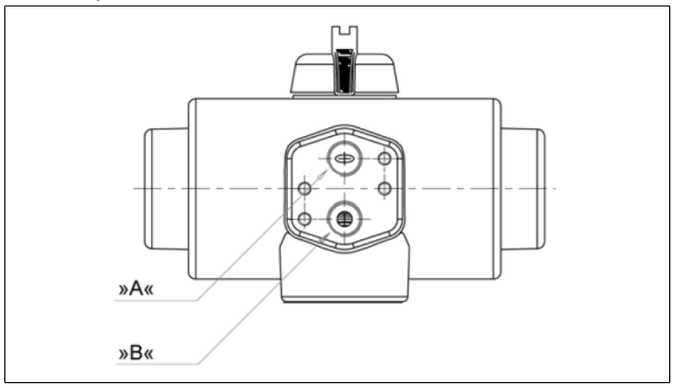

Normally closed NC: control pressure to connection »B«,valve opens
Normally open NO: control pressure to connection »B«,valve closes
Double acting DA: control pressure to connection »A«,valve closes control pressure to connection »B«,valve opens

Control:

3/2-way solenoid valves for NC/NO actuators
5/2-way solenoid valves for DA actuators

Note:

The drives require a control pressure of 6 bar for optimum function. Malfunctions may occur, if the control pressure deviates. In this case, a new drive configuration is necessary.

All rights for technical modifications withheld

ASV Stübbe GmbH & Co. KG · Hollwieser Str. 5 · D-32602 Vlotho · Tel. +49(0)5733. 799-0 · Fax +49(0)5733. 799-200 · contact@asv-stuebbe.de · www.asv-stuebbe.de

parts lists

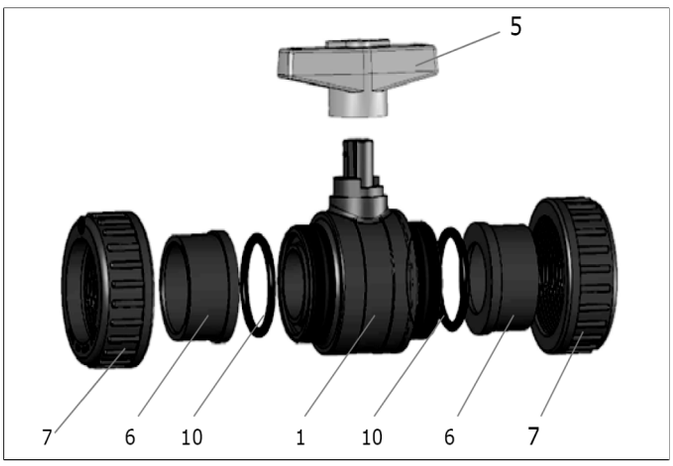

position	quantity	designation
1	1	body with ball
5	1	T-handle
6	2	union end
7	2	union nut
10	2	O-ring

All rights for technical modifications withheld

ASV Stübbe GmbH & Co. KG · Hollwieser Str. 5 · D-32602 Vlotho · Tel. +49(0)5733. 799-0 · Fax +49(0)5733. 799-200 · contact@asv-stuebbe.de · www.asv-stuebbe.de