Stübbe®
Partner for Solutions

Dosing Ball Valve C 100-Prop

ball valve with proportional flow characteristic

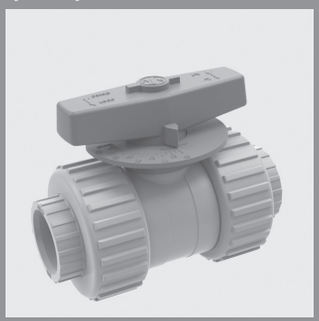
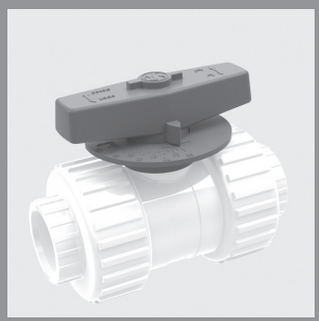

Advantage
- the alternative to a diaphragm valve
- linear control curve
- simple and reproducible setting by 0-90° scale
- completely dismantled
- radial mounting

Application
- chemical plants
- industrial plants
- water treatment
- electroplating plants

Utilisation
- for precise dosing of fluids

Dosing Range
- scale graduation 5°
- 0° up to 90°

Testing
- Requirements and testing according to DIN 3441, 3442, 8063 and 16962.

Flow Media
- Neutral and aggressive fluid or gaseous media free of solid particles, provided that the valve components coming into contact with the media are resistant at the operating temperature in accordance with the ASV resistance guide.

Nominal Pressure (H_2O, 20°C)
- PN 10 - PN 16

Fluid Temperature
- see pressure/temperature diagram

Operating Pressure
- see pressure/temperature diagram

Size
- DN 15 - DN 50

Body
- PVC-U
- PP
- PVDF

Ball
- PVC-U
- PP
- PVDF

Stem
- PVC-U
- PP
- PVDF

Ball Seat
- PTFE

Sealing
- FPM
- EPDM

Actuation
- with T-handle, simultaneously serving as a position indicator
- with electric variable speed actuator

Connection
- union featuring a connection thread suitable for plastic materials
- union socket end for solvent welding DIN ISO (PVC-U)
- union socket end for fusion welding DIN ISO (PP)
- union socket end for fusion welding DIN ISO (PVDF)
- union end acc. to BS, ANSI or JIS on request

Mounting
- operating element preferably at the top

Flow Direction
- always in the direction of the arrow

Accessories
- bracket

Colour
- body: PVC-U, grey, RAL 7011
- body: PP, grey, RAL 7032
- body: PVDF, opaque, yellowish-white
- T-handle: PVC-U, orange, RAL 2004
- scale: PVC-U, orange, RAL 2004

All rights for technical modifications withheld

ASV Stübbe GmbH & Co. KG · Hollwieser Str. 5 · D-32602 Vlotho · Tel. +49(0)5733. 799-0 · Fax +49(0)5733. 799-5000 · contact@asv-stuebbe.de · www.asv-stuebbe.de

Dosing Ball Valve C 100-Prop

Pressure/temperature diagram

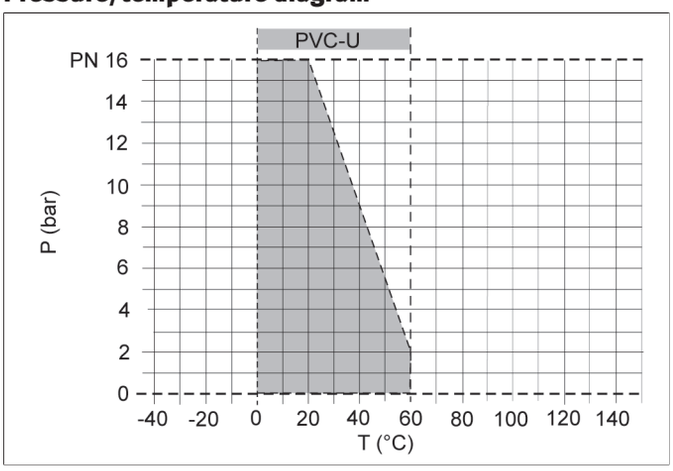

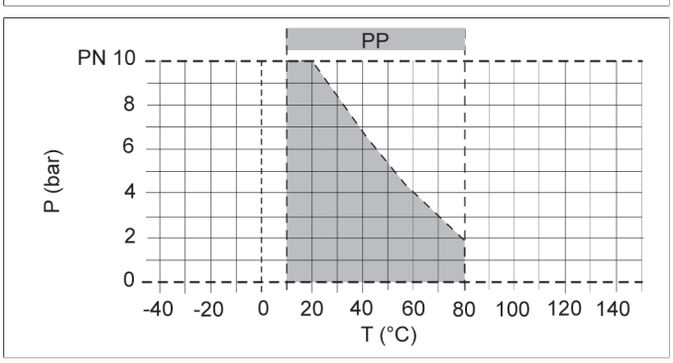

P = operating pressure
T = temperature
The pressure/temperature limits are applicable for the stated nominal pressures and a computed operating life factor of 25 years. These are standard values for harmless media (DIN 2403), to which the valve material is resistant.
For other media please refer to the ASV resistance guide.
The durability of wear parts depends on the operating conditions of the application.
For temperatures below 0°C (PP < +10°C) please specify the precise operating conditions of the application.
The rated pressure depends on the valve size and material. For the corresponding rated pressure value of the valve, please refer to the »Order table«.

Pressure/temperature diagram

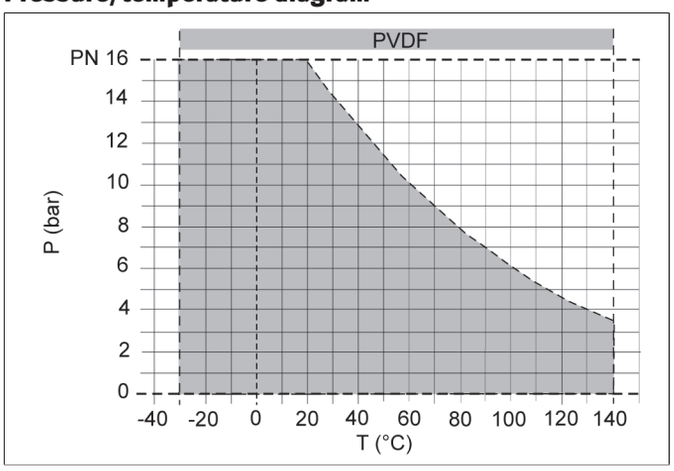

P = operating pressure
T = temperature
The pressure/temperature limits are applicable for the stated nominal pressures and a computed operating life factor of 25 years. These are standard values for harmless media (DIN 2403), to which the valve material is resistant.
For other media please refer to the ASV resistance guide.
The durability of wear parts depends on the operating conditions of the application.
For temperatures below 0°C (PP < +10°C) please specify the precise operating conditions of the application.
The rated pressure depends on the valve size and material. For the corresponding rated pressure value of the valve, please refer to the »Order table«.

Torque (Nm)

d (mm)	16	20	25	32	40	50	63
Md (Nm)	2,5	2,5	3,6	4,5	6,2	8,5	11,0

The specified torques apply to manually operated valves and are reference values. They were determined at the specified nominal pressures with H_2O, 20°C. These values can be higher or lower, depending on the operating pressure.

All rights for technical modifications withheld

ASV Stübbe GmbH & Co. KG · Hollwieser Str. 5 · D-32602 Vlotho · Tel. +49(0)5733. 799-0 · Fax +49(0)5733. 799-5000 · contact@asv-stuebbe.de · www.asv-stuebbe.de

Dosing Ball Valve C 100-Prop

Flow Q at delta p 1 bar

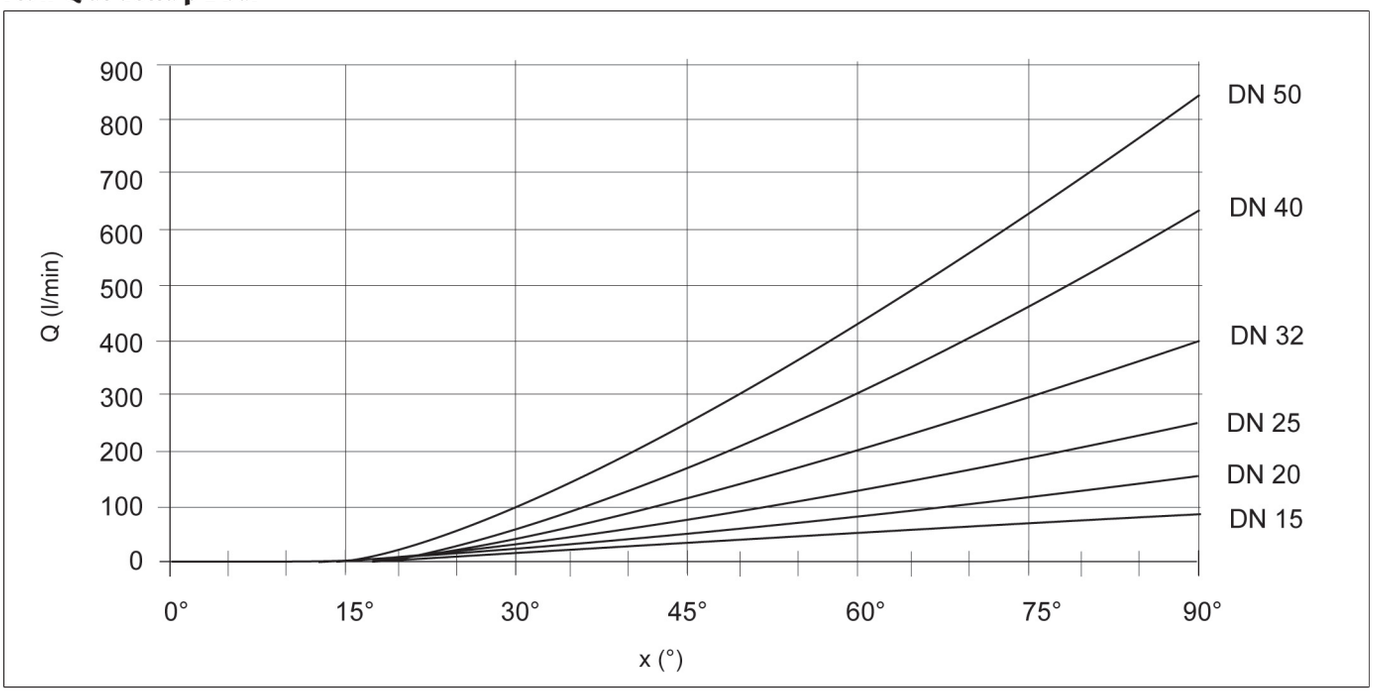

Q = flow
X = scale graduation

Operating note

Safe operation of the valve can only be ensured if it is properly installed, operated, serviced or repaired by qualified personnel according to its intended use while observing the accident prevention regulations, safety regulations, relevant standards, directives/technical regulations or codes of practice such as e.g. DIN, DIN EN, DIN ISO and DVS*. *DVS = German Welding Society
The intended use includes adhering to specified limit values for pressure and temperature, as well as checking the resistance. This requires all components coming into contact with the medium to be "resistant" in accordance with the ASV resistance guide.

All rights for technical modifications withheld

ASV Stübbe GmbH & Co. KG · Hollwieser Str. 5 · D-32602 Vlotho · Tel. +49(0)5733. 799-0 · Fax +49(0)5733. 799-5000 · contact@asv-stuebbe.de · www.asv-stuebbe.de

Dosing Ball Valve C 100-Prop, manual

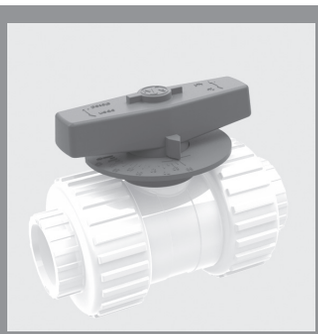

body PVC-U		**ball PVC-U**							
size	d(mm)			20	25	32	40	50	63
pressure range	DN(mm)			15	20	25	32	40	50
	DN(inch)			1/2	3/4	1	1 1/4	1 1/2	2
	PN(bar)			16	16	16	16	16	16
Connection	*ball seat*	*sealing*	*ident No.*						
PVC-U	PTFE	EPDM		141530	141531	141532	141533	141534	141535
socket end DIN ISO	PTFE	FPM		141536	141537	141538	141539	141540	141541
	weight			*0.16 kg*	*0.28 kg*	*0.40 kg*	*0.42 kg*	*1.00 kg*	*1.70 kg*

body PP		**ball PP**							
size	d(mm)			20	25	32	40	50	63
pressure range	DN(mm)			15	20	25	32	40	50
	DN(inch)			1/2	3/4	1	1 1/4	1 1/2	2
	PN(bar)			10	10	10	10	10	10
Connection	*ball seat*	*sealing*	*ident No.*						
PP	PTFE	EPDM		141542	141543	141544	141545	141546	141547
socket end DIN ISO	PTFE	FPM		141548	141549	141550	141551	141552	141553
	weight			*0.13 kg*	*0.25 kg*	*0.35 kg*	*0.57 kg*	*0.65 kg*	*0.74 kg*

body PVDF		**ball PVDF**							
size	d(mm)			20	25	32	40	50	63
pressure range	DN(mm)			15	20	25	32	40	50
	DN(inch)			1/2	3/4	1	1 1/4	1 1/2	2
	PN(bar)			16	16	16	16	16	16
Connection	*ball seat*	*sealing*	*ident No.*						
PVDF	PTFE	FPM		141554	141555	141556	141557	141558	141559
socket end DIN ISO	*weight*			*0.23 kg*	*0.32 kg*	*0.48 kg*	*0.90 kg*	*1.31 kg*	*2.06 kg*

All rights for technical modifications withheld

ASV Stübbe GmbH & Co. KG · Hollwieser Str. 5 · D-32602 Vlotho · Tel. +49(0)5733. 799-0 · Fax +49(0)5733. 799-5000 · contact@asv-stuebbe.de · www.asv-stuebbe.de

Dosing Ball Valve C 100-Prop, manual

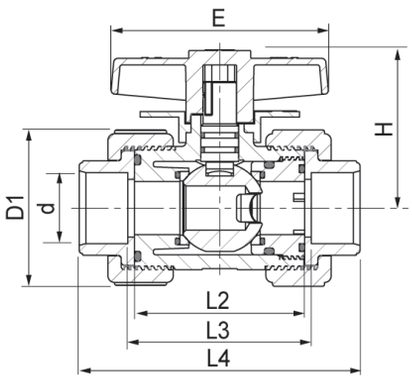

dimensions

d(mm)		20	25	32	40	50	63
DN(mm)		15	20	25	32	40	50
DN(inch)		1/2	3/4	1	1 1/4	1 1/2	2
dimensions(mm)							
	D1	49	59	69	86	101	123
	E	68	78	88	98	108	118
	H	51	61	70	81	90	110
	L2	59	72	76	86	93	113
PP	L3	68	84	90	103	114	140
PVC-U	L3	65	78	82	92	99	119
PVDF	L3	67	83	89	102	112	138
PP	L4	97	116	126	144	160	195
PVC-U	L4	97	116	126	144	161	197
PVDF	L4	96	115	125	143	159	194

All rights for technical modifications withheld

ASV Stübbe GmbH & Co. KG · Hollwieser Str. 5 · D-32602 Vlotho · Tel. +49(0)5733. 799-0 · Fax +49(0)5733. 799-5000 · contact@asv-stuebbe.de · www.asv-stuebbe.de

Dosing Ball Valve C 100-Prop, electric

Voltage
- please refer to the technical data

Mounting Set
- PA, glass fibre reinforced

Coupling
- PA, glass fibre reinforced

Bracket
- PA, glass fibre reinforced

Screws
- stainless steel (1.4301)

Actuator variant frei			body PVC-U			ball PVC-U			
size	d(mm)			20	25	32	40	50	63
pressure range	DN(mm)			15	20	25	32	40	50
	DN(inch)			1/2	3/4	1	1 1/4	1 1/2	2
	PN(bar)			16	16	16	16	16	16
Connection	*ball seat*	*sealing*	*ident No.*						
PVC-U	PTFE	EPDM		1415309135	1415319135	1415329135	1415339135	1415349135	1415359135
socket end DIN ISO	PTFE	FPM		1415369135	1415379135	1415389135	1415399135	1415409135	1415419135
				1.86 kg	*1.97 kg*	*2.08 kg*	*2.38 kg*	*2.68 kg*	*3.40 kg*

All rights for technical modifications withheld

ASV Stübbe GmbH & Co. KG · Hollwieser Str. 5 · D-32602 Vlotho · Tel. +49(0)5733. 799-0 · Fax +49(0)5733. 799-5000 · contact@asv-stuebbe.de · www.asv-stuebbe.de

Dosing Ball Valve C 100-Prop, electric

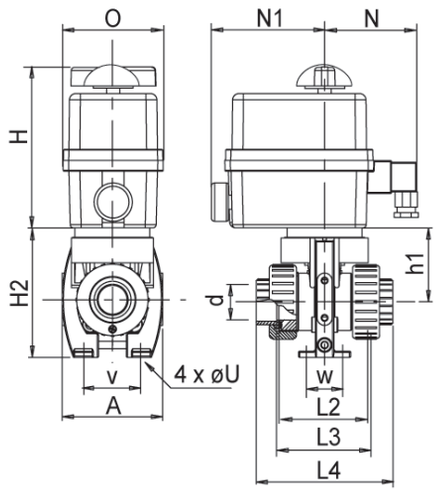

dimensions

d(mm)	20	25	32	40	50	63
DN(mm)	15	20	25	32	40	50
DN(inch)	1/2	3/4	1	1 1/4	1 1/2	2
actuator type	ER Plus	ER Plus	ER Plus	ER Plus	ER Plus	ER Plus
dimensions(mm)						
A	78	82	104	102	130	134
H	152	152	152	152	152	152
h1	50	60	66	74	95.5	104
H2	97	105	128	128	189	193
L2	59	72	76	86	93	113
L3	65	78	82	92	99	119
L4	97	116	126	144	161	197
u	5.5	5.5	5.5	5.5	5.5	5.5
v	44	47	58	51	90	88
w	30	30	30	30	30	30
N	87	87	87	87	87	87
N1	106	106	106	106	106	106
O	128	128	128	128	128	128

All rights for technical modifications withheld

ASV Stübbe GmbH & Co. KG · Hollwieser Str. 5 · D-32602 Vlotho · Tel. +49(0)5733. 799-0 · Fax +49(0)5733. 799-5000 · contact@asv-stuebbe.de · www.asv-stuebbe.de

Dosing Ball Valve C 100-Prop, electric

Technical data

ER Plus variable speed actuator

actuator type	ER Plus	ER Plus (*)
Torque	20	20
Voltage	90-240 VAC / 90-350 VDC	15-30 VAC / 12-48 VDC
Manipulating time(s)	25	25
Power consumption(W)	15	15
Setting angle(°)	90	90
Weight(kg)	1.5	1.5
Duty cycle(%)	50	50
Type of protection	IP 67	IP 67
Temperature(°C)	-10 ... 55	-10 ... 55

(*) Drive variants: please order separately.

Recommended wiring

Variable speed actuator ER Plus

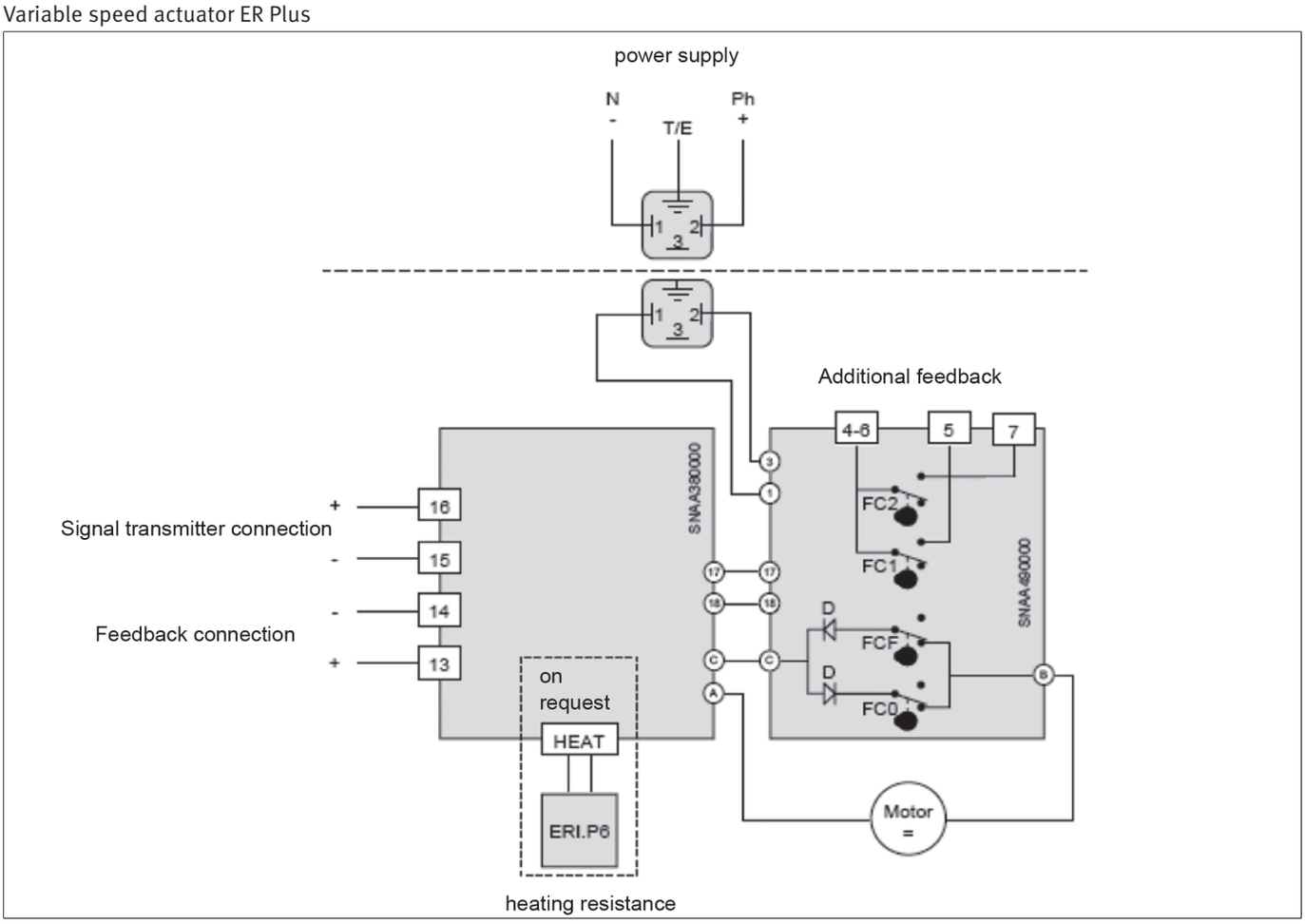

Manual emergency control

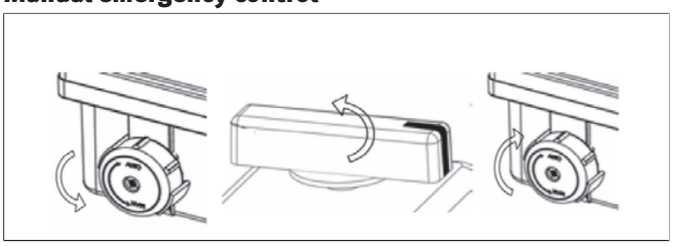

The valve can be manually operated in the event of an interruption of the power supply. To allow manual emergency control, turn the coupling switch from "AUTO" to "MAN" and hold in the "MAN" position. Turn the actuator shaft with the aid of an adjustable spanner. Release the coupling switch to re-engage the gearing.

All rights for technical modifications withheld

ASV Stübbe GmbH & Co. KG · Hollwieser Str. 5 · D-32602 Vlotho · Tel. +49(0)5733. 799-0 · Fax +49(0)5733. 799-5000 · contact@asv-stuebbe.de · www.asv-stuebbe.de

Programming

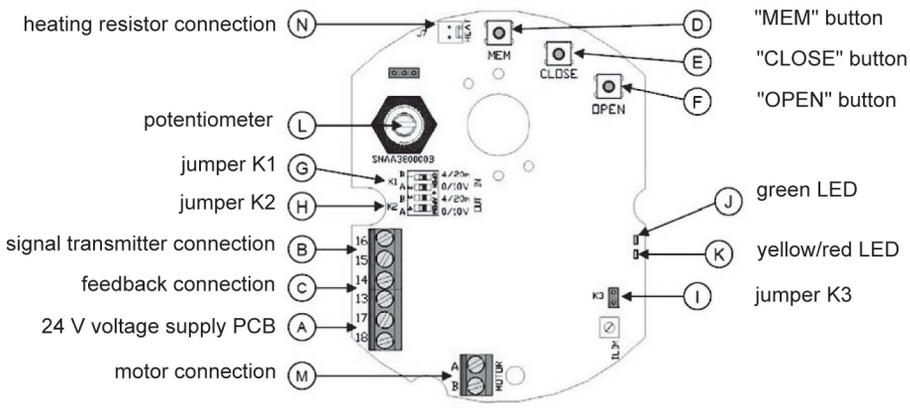

CAUTION!

Always disconnect the voltage supply plug from the actuator prior to performing any settings.

1. Rotational direction

1.1 Normal direction of rotation (preset).

· Press "OPEN", connect the voltage supply plug to the actuator while keeping the button pressed, the green LED lights up.
Release the "OPEN" button, disconnect the plug from the actuator for 5 seconds and then reconnect.

1.2 Reverse direction of rotation

· Press "CLOSE", connect the voltage supply plug to the actuator while keeping the button pressed, the red LED lights up.
Release the "CLOSE" button, disconnect the plug from the actuator for 5 seconds and then reconnect.

2. Input signal

2.1 Input signal 0…10 V

· Press "MEM", connect the voltage supply plug to the actuator while keeping the button pressed, the red LED flashes three times.
Release the "MEM" button, disconnect the plug from the actuator for 5 seconds and then reconnect.

2.2 Input signal 0…20 mA

· Press "MEM" and "CLOSE", connect the voltage supply plug to the actuator while keeping the button pressed, the red LED flashes three times.
Release the buttons, disconnect the plug from the actuator for 5 seconds and then reconnect.

2.3 Input signal 4…20 mA (preset)

· Press "MEM" and "CLOSE", connect the voltage supply plug to the actuator while keeping the button pressed, the red LED flashes three times.
Release the buttons, disconnect the plug from the actuator for 5 seconds and then reconnect.

All rights for technical modifications withheld

ASV Stübbe GmbH & Co. KG · Hollwieser Str. 5 · D-32602 Vlotho · Tel. +49(0)5733. 799-0 · Fax +49(0)5733. 799-5000 · contact@asv-stuebbe.de · www.asv-stuebbe.de

3. Learning mode (setting "OPEN/CLOSE" limits)

· Press "OPEN" and "CLOSE", connect the voltage supply plug to the actuator while keeping the button pressed, both LEDs light up. Release the button, the two LEDs extinguish. The learning mode is selected.

· Press the »CLOSE« button to close the valve.
The red LED lights up. Save the closed position by pressing "MEM" and "CLOSE", the red LED flashes three times to confirm..

· Press the »OPEN« button to open the valve. The green LED lights up. Save the open position by pressing "MEM" and "OPEN", the green LED flashes three times to confirm. Disconnect the plug from the actuator for 5 seconds, then reconnect

4. Output signal

Prior to performing any changes, disconnect the plug from the actuator.

Input (k1)
Voltage: A = ON, B = OFF
Current: A = OFF, B = ON

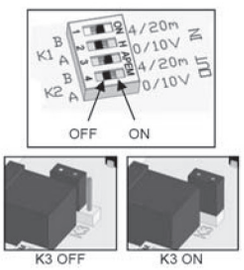

Output (k2)
Voltage: A = ON, B = OFF
Current: A = OFF, B = ON

Current range for output (k3)
4…20 mA: ON
0…20 mA: OFF

Standard operation

· Connect the voltage supply plug to the actuator. The green LED flashes three times to show that the starting process has been correctly performed.

· In standard operation the green LED lights up when the actuator opens the valve, and the red LED when the actuator closes the valve.

· If neither of the two LEDs lights up, the actuator has not been selected.

· Both LEDs light up and the actuator stops in the event of excessive torque. To restart the actuator it is necessary to change the direction of rotation.

All rights for technical modifications withheld

ASV Stübbe GmbH & Co. KG · Hollwieser Str. 5 · D-32602 Vlotho · Tel. +49(0)5733. 799-0 · Fax +49(0)5733. 799-5000 · contact@asv-stuebbe.de · www.asv-stuebbe.de