Stübbe®
Partner for Solutions

Dosing ball valve ProfiDos 101

one-piece, safefloat ball, can be radially mounted and removed, compact

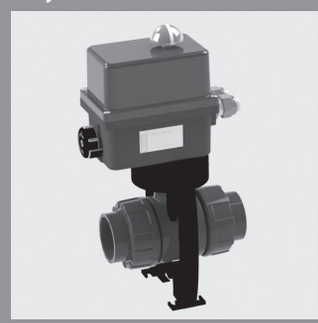
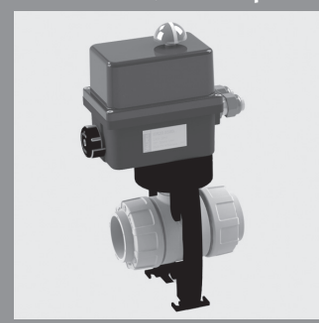

Advantage
- optimised kv value - for all sizes, the internal ball diameter is constructively adapted to the internal pipe diameter
- the alternative to a diaphragm valve

Application
- chemical plants
- water treatment
- electroplating plants

Utilisation
- for precise dosing of fluids

Dosing Range
- 0° to 180°
- scale graduation 5°

Flow Media
- Neutral and aggressive fluid or gaseous media free of solid particles, provided that the valve components coming into contact with the media are resistant at the operating temperature in accordance with the ASV resistance guide.

Testing
- Requirements and testing according to DIN 3441, 3442, 8063 and 16962.

Nominal Pressure (H_2O, 20°C)
- PN 10 - PN 16

Fluid Temperature
- see pressure/temperature diagram

Operating Pressure
- see pressure/temperature diagram

Size
- DN 15 - DN 50

Body
- PVC-U
- PP

Stem
- PVC-U
- PP

Ball Seat
- PTFE

Sealing
- FPM
- EPDM

Actuation
- with T-handle, simultaneously serving as a position indicator
- with electric variable speed actuator

Connection
- union DIN 8063
- union socket end for solvent welding DIN ISO (PVC-U)
- union socket end for fusion welding DIN ISO (PP)

Mounting
- operating element preferably at the top

Flow Direction
- always in the direction of the arrow

Option
- bracket

Colour
- body: PVC-U, grey, RAL 7011
- body: PP, grey, RAL 7032
- T-handle: PVC-U, orange, RAL 2004

All rights for technical modifications withheld

ASV Stübbe GmbH & Co. KG · Hollwieser Str. 5 · D-32602 Vlotho · Tel. +49(0)5733. 799-0 · Fax +49(0)5733. 799-5000 · contact@asv-stuebbe.de · www.asv-stuebbe.de

Dosing ball valve ProfiDos 101

Flow Q at DP 1 bar

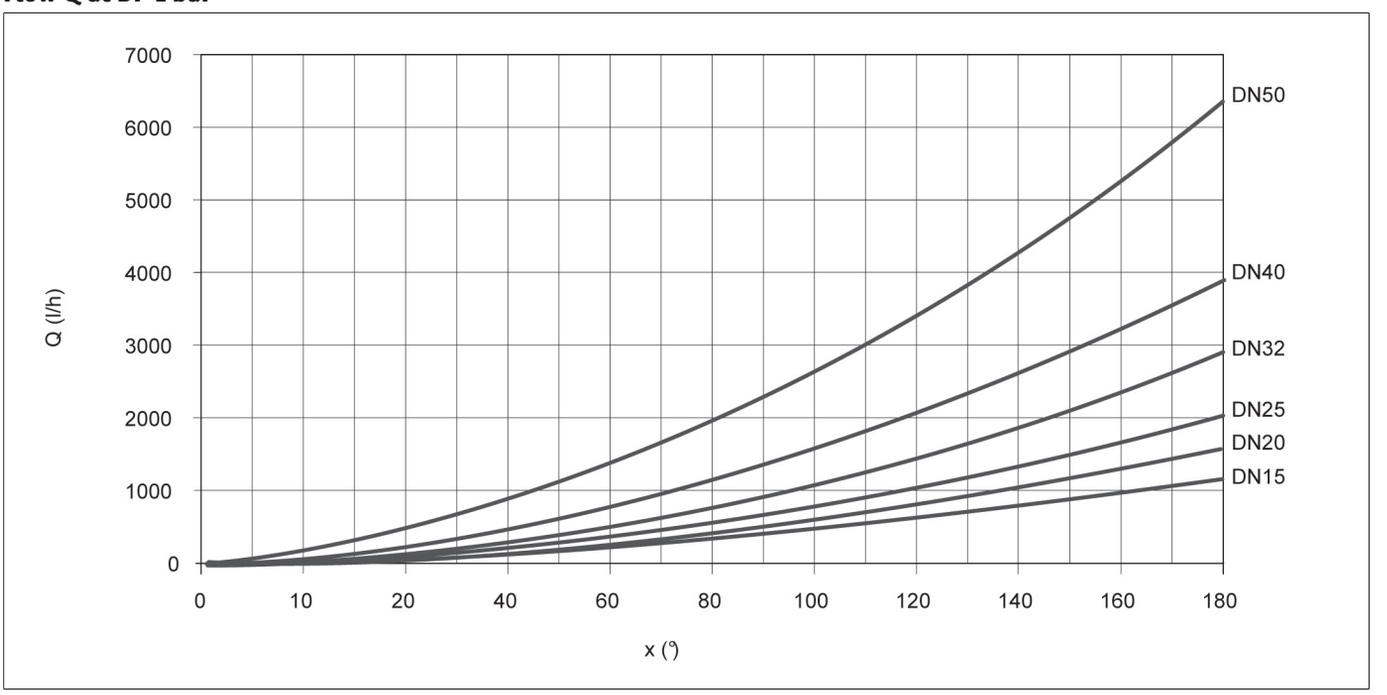

''Q= flow''
''x= scale graduation''

Torque (Nm)

d (mm)	20	25	32	40	50	63
PVC-U	2,5	3,6	4,5	6,2	8,5	11,0
PP	2,0	3,0	4,0	5,8	8,0	10,3

Operating note

Safe operation of the valve can only be ensured if it is properly installed, operated, serviced or repaired by qualified personnel according to its intended use while observing the accident prevention regulations, safety regulations, relevant standards, directives/technical regulations or codes of practice such as e.g. DIN, DIN EN, DIN ISO and DVS*. *DVS = German Welding Society The intended use includes adhering to specified limit values for pressure and temperature, as well as checking the resistance. This requires all components coming into contact with the medium to be "resistant" in accordance with the ASV resistance guide.

All rights for technical modifications withheld

ASV Stübbe GmbH & Co. KG · Hollwieser Str. 5 · D-32602 Vlotho · Tel. +49(0)5733. 799-0 · Fax +49(0)5733. 799-5000 · contact@asv-stuebbe.de · www.asv-stuebbe.de

Dosing ball valve ProfiDos 101, manual

body PVC-U **ball PVC-U**

size	d(mm)			20	25	32	40	50	63
pressure range	DN(mm)			15	20	25	32	40	50
	DN(inch)			1/2	3/4	1	1 1/4	1 1/2	2
	PN(bar)			16	16	16	16	16	16
Connection	*ball seat*	*sealing*	*ident No.*						
PVC-U	PTFE	EPDM		132661	132662	132663	132664	132665	132666
socket end DIN ISO	PTFE	FPM		132673	132674	132675	132676	132677	132678
	weight			*0.16 kg*	*0.27 kg*	*0.38 kg*	*0.68 kg*	*0.98 kg*	*1.68 kg*

body PP **ball PP**

size	d(mm)			20	25	32	40	50	63
pressure range	DN(mm)			15	20	25	32	40	50
	DN(inch)			1/2	3/4	1	1 1/4	1 1/2	2
	PN(bar)			10	10	10	10	10	10
Connection	*ball seat*	*sealing*	*ident No.*						
PP	PTFE	EPDM		132667	132668	132669	132670	132671	132672
socket end DIN ISO	PTFE	FPM		132679	132680	132681	132682	132683	132684
	weight			*0.13 kg*	*0.20 kg*	*0.29 kg*	*0.47 kg*	*0.74 kg*	*1.17 kg*

All rights for technical modifications withheld

ASV Stübbe GmbH & Co. KG · Hollwieser Str. 5 · D-32602 Vlotho · Tel. +49(0)5733. 799-0 · Fax +49(0)5733. 799-5000 · contact@asv-stuebbe.de · www.asv-stuebbe.de

Dosing ball valve ProfiDos 101, manual

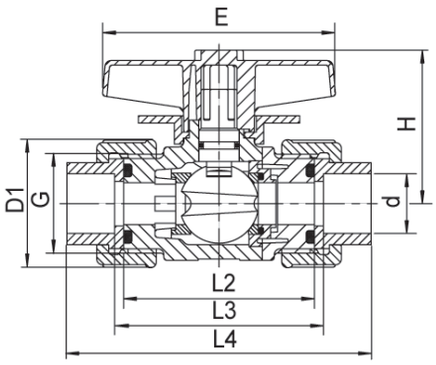

dimensions

d(mm)		20	25	32	40	50	63
DN(mm)		15	20	25	32	40	50
DN(inch)		1/2	3/4	1	1 1/4	1 1/2	2
dimensions(mm)							
PP	D1	46	56	66	79	87	107
PVC-U	D1	44	53	60	74	83	103
	E	60	85	98	108	108	118
	G	1	1 1/4	1 1/2	2	2 1/4	2 3/4
	H	42	55	71	82	90	110
PP	L2	63	75	87	91	95	115
PVC-U	L2	64	76	81	92	95	115
PP	L3	70	82	85	97	101	121
PVC-U	L3	70	82	85	98	101	121
PP	L4	98	113	121	138	148	176
PVC-U	L4	102	120	131	150	163	197

All rights for technical modifications withheld

ASV Stübbe GmbH & Co. KG · Hollwieser Str. 5 · D-32602 Vlotho · Tel. +49(0)5733. 799-0 · Fax +49(0)5733. 799-5000 · contact@asv-stuebbe.de · www.asv-stuebbe.de

Dosing ball valve ProfiDos 101, electric

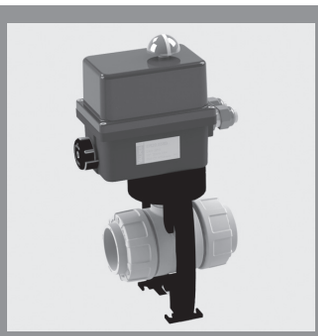

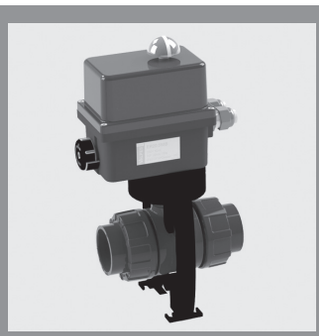

Actuator variant 230 V variable drive				body PVC-U			ball PVC-U		
size	d(mm)			20	25	32	40	50	63
pressure range	DN(mm)			15	20	25	32	40	50
	DN(inch)			1/2	3/4	1	1 1/4	1 1/2	2
	PN(bar)			16	16	16	16	16	16
Connection	*ball seat*	*sealing*	*ident No.*						
PVC-U	PTFE	EPDM		1326619135	1326629135	1326639135	1326649135	1326659135	1326669135
socket end DIN ISO	PTFE	FPM		1326739135	1326749135	1326759135	1326769135	1326779135	1326789135
	weight			*1.86 kg*	*1.97 kg*	*2.08 kg*	*2.38 kg*	*2.68 kg*	*3.38 kg*

Actuator variant 230 V variable drive				body PP			ball PP		
size	d(mm)			20	25	32	40	50	63
pressure range	DN(mm)			15	20	25	32	40	50
	DN(inch)			1/2	3/4	1	1 1/4	1 1/2	2
	PN(bar)			10	10	10	10	10	10
Connection	*ball seat*	*sealing*	*ident No.*						
PP	PTFE	EPDM		1326679135	1326689135	1326699135	1326709135	1326719135	1326729135
socket end DIN ISO	PTFE	FPM		1326799135	1326809135	1326819135	1326829135	1326839135	1326849135
	weight			*1.83 kg*	*1.90 kg*	*1.99 kg*	*2.17 kg*	*2.44 kg*	*2.87 kg*

All rights for technical modifications withheld

ASV Stübbe GmbH & Co. KG · Hollwieser Str. 5 · D-32602 Vlotho · Tel. +49(0)5733. 799-0 · Fax +49(0)5733. 799-5000 · contact@asv-stuebbe.de · www.asv-stuebbe.de

Dosing ball valve ProfiDos 101, electric

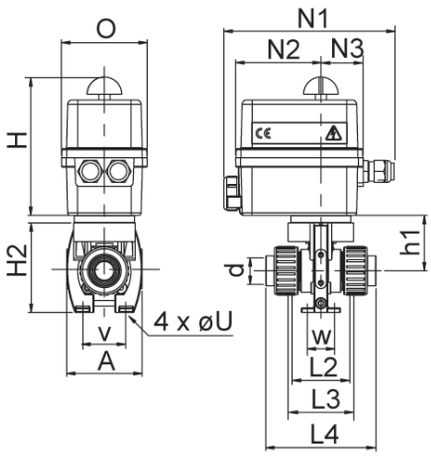

dimensions

d(mm)		20	25	32	40	50	63
DN(mm)		15	20	25	32	40	50
DN(inch)		1/2	3/4	1	1 1/4	1 1/2	2
actuator type		ER Plus	ER Plus	ER Plus	ER Plus	ER Plus	ER Plus
dimensions(mm)							
	A	78	82	104	102	130	134
PP	H	141	141	141	141	147	147
PVC-U	H	141	141	141	141	141	147
	h1	50	60	66	74	105.5	118
	H2	97	105	128	128	188.5	192.5
PP	L2	63	75	79	91	95	115
PVC-U	L2	64	76	81	92	95	115
PP	L3	69	81	85	97	101	121
PVC-U	L3	70	82	87	98	101	121
PP	L4	98	113	121	138	148	176
PVC-U	L4	102	120	131	150	163	197
	u	5.5	5.5	5.5	5.5	5.5	5.5
	w	30	30	30	30	30	30
	N1	189	189	189	189	189	189
	N2	91	91	91	91	91	91
	N3	45	45	45	45	45	45
	O	92	92	92	92	92	92
	V	44	47	58	51	90	88

All rights for technical modifications withheld

ASV Stübbe GmbH & Co. KG · Hollwieser Str. 5 · D-32602 Vlotho · Tel. +49(0)5733. 799-0 · Fax +49(0)5733. 799-5000 · contact@asv-stuebbe.de · www.asv-stuebbe.de

Dosing ball valve ProfiDos 101, electric

Technical data

ER Plus variable speed actuator

actuator type	ER Plus	ER Plus (*)
Torque	20	20
Voltage	90-240 VAC / 90-350 VDC	15-30 VAC / 12-48 VDC
Manipulating time(s)	48	48
Power consumption(W)	15	15
Setting angle(°)	180	180
Weight(kg)	1.5	1.5
Duty cycle(%)	50	50
Type of protection	IP 67	IP 67
Temperature(°C)	-10 ... 55	-10 ... 55

(*) Drive variants: please order separately.

Recommended wiring

Variable speed actuator ER Plus

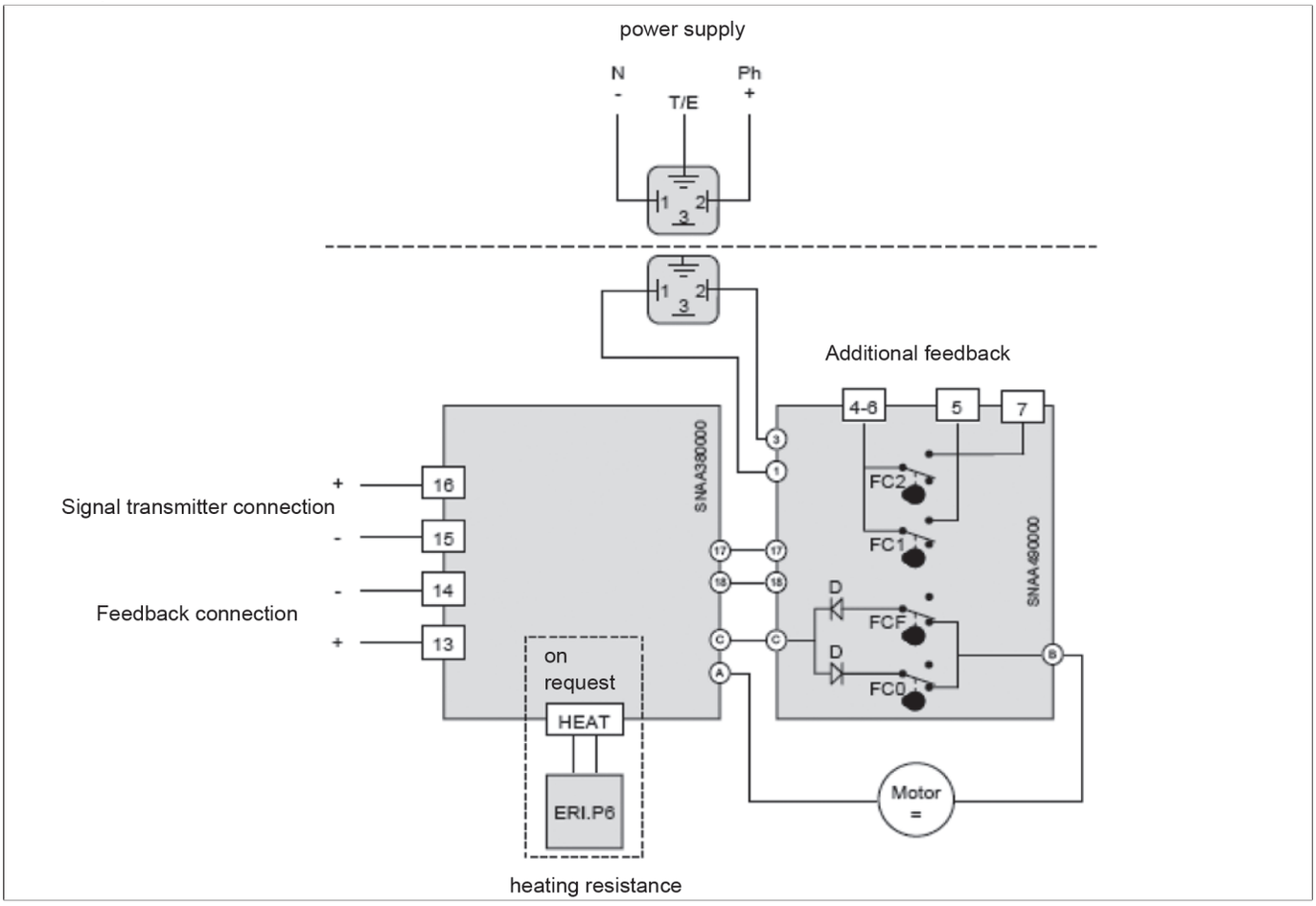

Manual emergency control

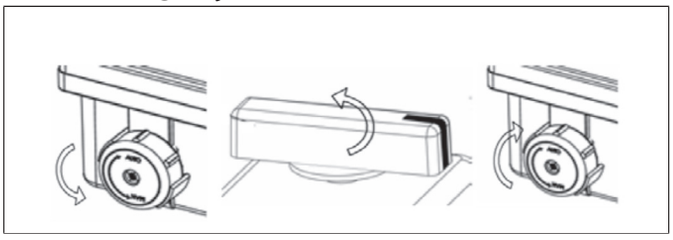

The valve can be manually operated in the event of an interruption of the power supply. To allow manual emergency control, turn the coupling switch from "AUTO" to "MAN" and hold in the "MAN" position. Turn the actuator shaft with the aid of an adjustable spanner. Release the coupling switch to re-engage the gearing.

All rights for technical modifications withheld

ASV Stübbe GmbH & Co. KG · Hollwieser Str. 5 · D-32602 Vlotho · Tel. +49(0)5733. 799-0 · Fax +49(0)5733. 799-5000 · contact@asv-stuebbe.de · www.asv-stuebbe.de

Programming

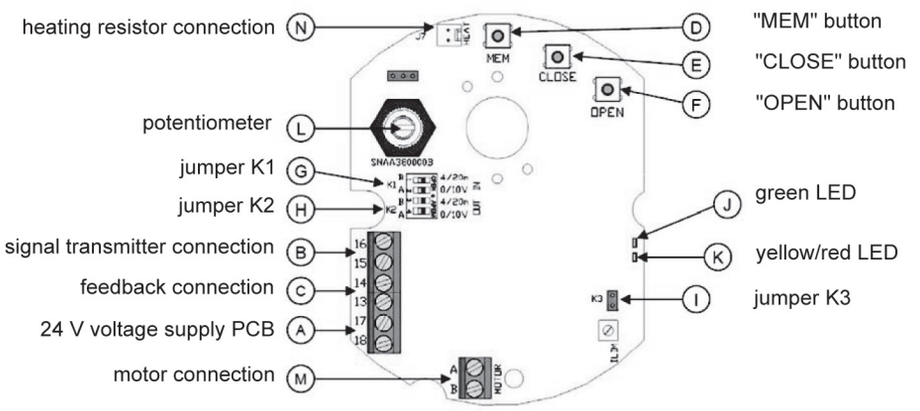

CAUTION!

Always disconnect the voltage supply plug from the actuator prior to performing any settings.

1. Rotational direction

1.1 Normal direction of rotation (preset).

· Press "OPEN", connect the voltage supply plug to the actuator while keeping the button pressed, the green LED lights up.
Release the "OPEN" button, disconnect the plug from the actuator for 5 seconds and then reconnect.

1.2 Reverse direction of rotation

· Press "CLOSE", connect the voltage supply plug to the actuator while keeping the button pressed, the red LED lights up.
Release the "CLOSE" button, disconnect the plug from the actuator for 5 seconds and then reconnect.

2. Input signal

2.1 Input signal 0…10 V

· Press "MEM", connect the voltage supply plug to the actuator while keeping the button pressed, the red LED flashes three times.
Release the "MEM" button, disconnect the plug from the actuator for 5 seconds and then reconnect.

2.2 Input signal 0…20 mA

· Press "MEM" and "CLOSE", connect the voltage supply plug to the actuator while keeping the button pressed, the red LED flashes three times.
Release the buttons, disconnect the plug from the actuator for 5 seconds and then reconnect.

2.3 Input signal 4…20 mA (preset)

· Press "MEM" and "CLOSE", connect the voltage supply plug to the actuator while keeping the button pressed, the red LED flashes three times.
Release the buttons, disconnect the plug from the actuator for 5 seconds and then reconnect.

All rights for technical modifications withheld

ASV Stübbe GmbH & Co. KG · Hollwieser Str. 5 · D-32602 Vlotho · Tel. +49(0)5733. 799-0 · Fax +49(0)5733. 799-5000 · contact@asv-stuebbe.de · www.asv-stuebbe.de

Dosing ball valve ProfiDos 101, electric

3. Learning mode (setting "OPEN/CLOSE" limits)

· Press "OPEN" and "CLOSE", connect the voltage supply plug to the actuator while keeping the button pressed, both LEDs light up. Release the button, the two LEDs extinguish. The learning mode is selected.

· Press the »CLOSE« button to close the valve.
The red LED lights up. Save the closed position by pressing "MEM" and "CLOSE", the red LED flashes three times to confirm..

· Press the »OPEN« button to open the valve. The green LED lights up. Save the open position by pressing "MEM" and "OPEN", the green LED flashes three times to confirm. Disconnect the plug from the actuator for 5 seconds, then reconnect

4. Output signal

Prior to performing any changes, disconnect the plug from the actuator.

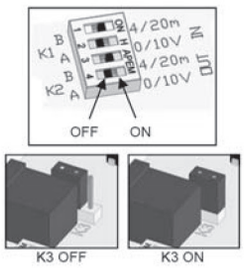

Input (k1)
Voltage: A = ON, B = OFF
Current: A = OFF, B = ON

Output (k2)
Voltage: A = ON, B = OFF
Current: A = OFF, B = ON

Current range for output (k3)
4…20 mA: ON
0…20 mA: OFF

Standard operation

· Connect the voltage supply plug to the actuator. The green LED flashes three times to show that the starting process has been correctly performed.

· In standard operation the green LED lights up when the actuator opens the valve, and the red LED when the actuator closes the valve.

· If neither of the two LEDs lights up, the actuator has not been selected.

· Both LEDs light up and the actuator stops in the event of excessive torque. To restart the actuator it is necessary to change the direction of rotation.

All rights for technical modifications withheld

ASV Stübbe GmbH & Co. KG · Hollwieser Str. 5 · D-32602 Vlotho · Tel. +49(0)5733. 799-0 · Fax +49(0)5733. 799-5000 · contact@asv-stuebbe.de · www.asv-stuebbe.de

All rights for technical modifications withheld

ASV Stübbe GmbH & Co. KG · Hollwieser Str. 5 · D-32602 Vlotho · Tel. +49(0)5733. 799-0 · Fax +49(0)5733. 799-5000 · contact@asv-stuebbe.de · www.asv-stuebbe.de